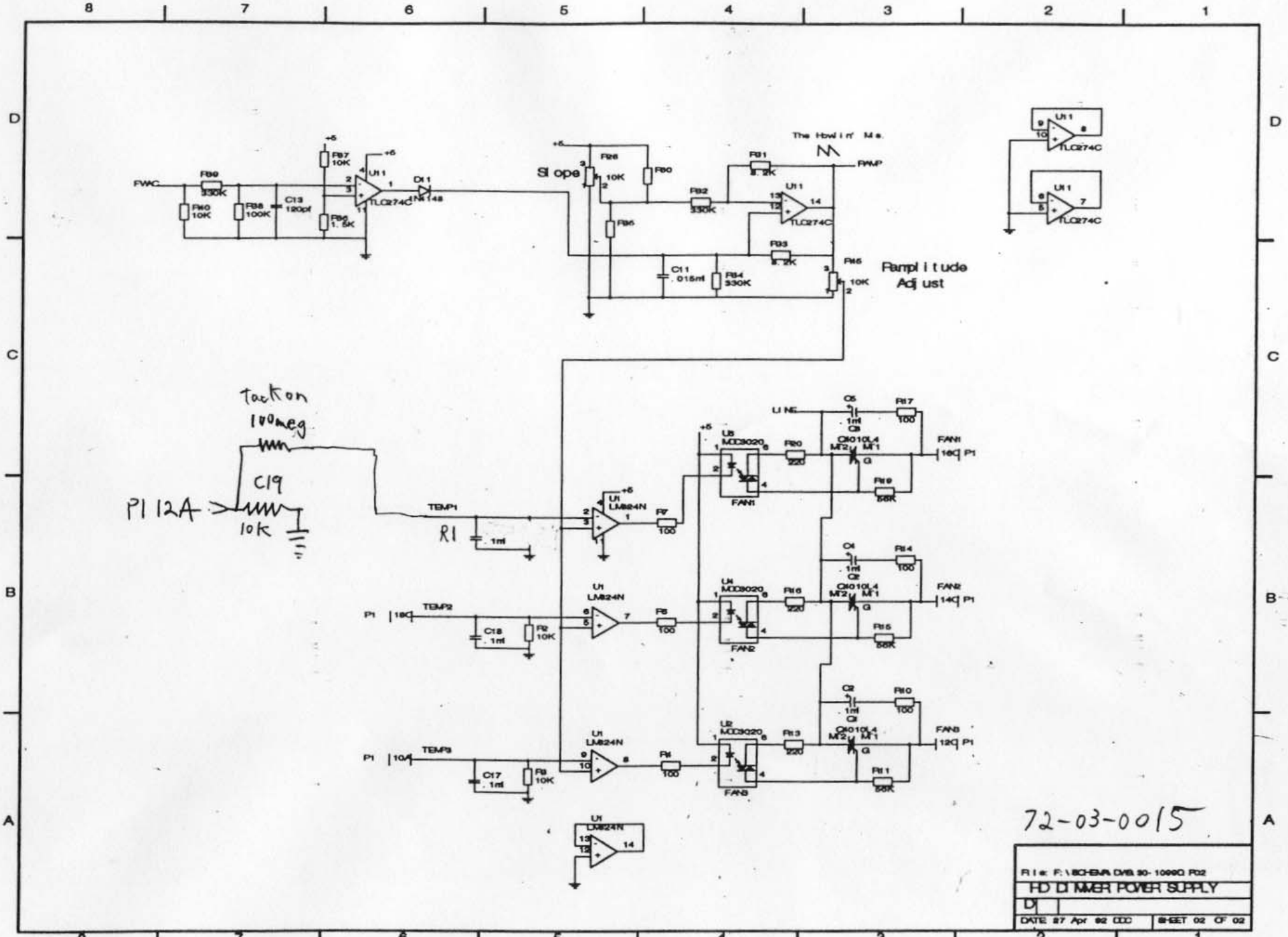
FWC
R89 330K
R90 10K
R88 100K
C13 120pf
R87 10K
R86 1.5K
U11 TLC274C
D11 1N148
Slope
R26 10K
R80
R85
R82 330K
R81 8.2K
R83 8.2K
U11 TLC274C
The Howlin' Mis.
RAMP
C11 .015mf
R84 330K
R46 10K
Pampl i tude
Adj ust
U11 TLC274C
U11 TLC274C
Tacton
100meg
C19
P1 12A
10k
TEMP1
R1
.1mf
U1 LM824N
R7 100
U5 MOD3020
R10 220
FAN1
LINE
C5 .1mf
R17 100
CK010L4
R19 56K
FAN1
P1 16
TEMP2
C18 .1mf
R2 10K
U1 LM824N
R6 100
U4 MOD3020
R16 220
FAN2
C4 .1mf
R14 100
R15 56K
FAN2
P1 14
TEMP3
C17 .1mf
R9 10K
U1 LM824N
R4 100
U2 MOD3020
R13 220
FAN3
C2 .1mf
R10 100
R11 56K
FAN3
P1 12
U1 LM824N
72-03-0015
FILE: F:\SCHEMA DVB 30-1099D P02
HD DIMMER POWER SUPPLY
D
DATE 27 Apr 92 DDC
SHEET 02 OF 02
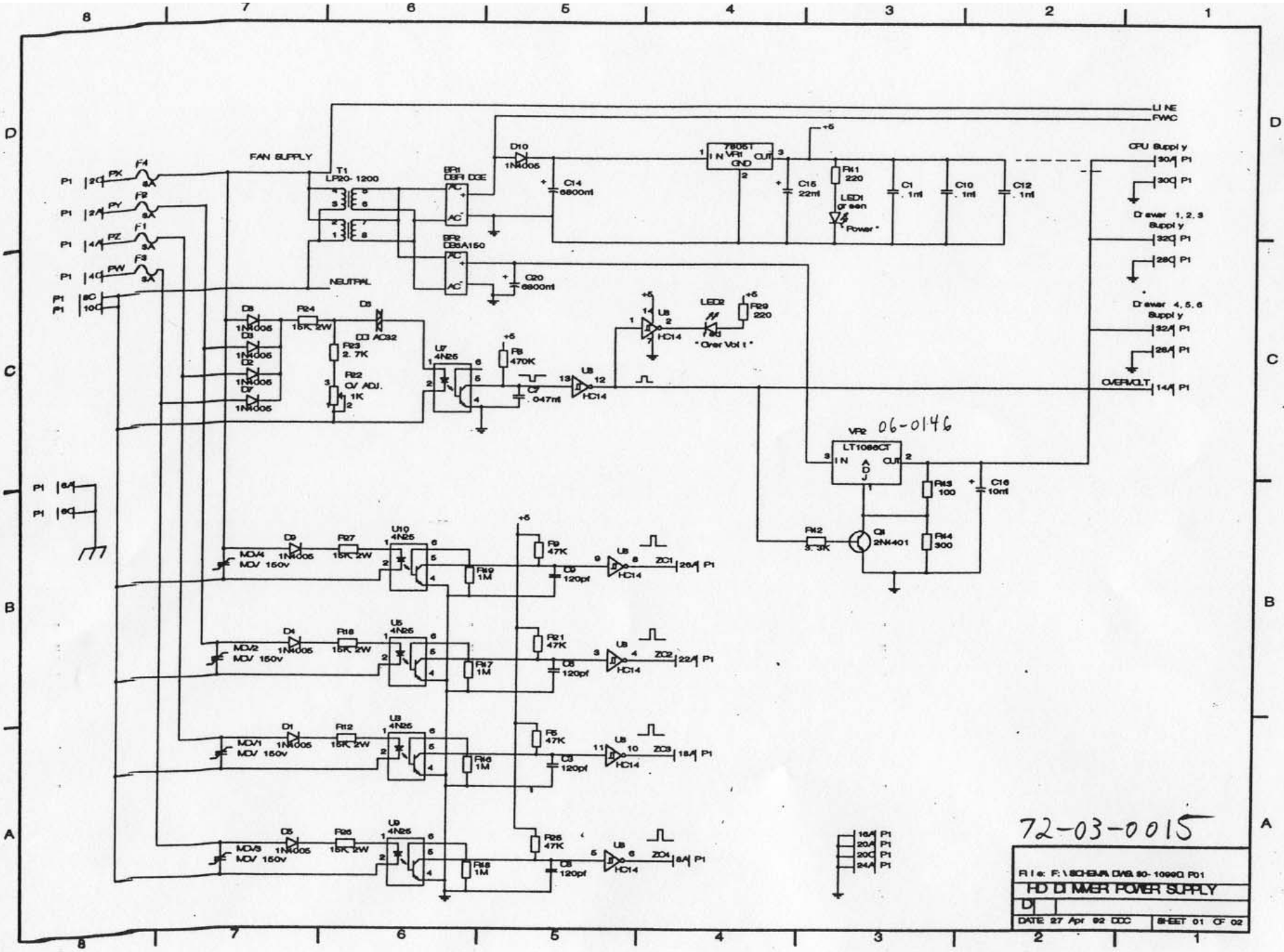
8.4 Schematic - Power Supply